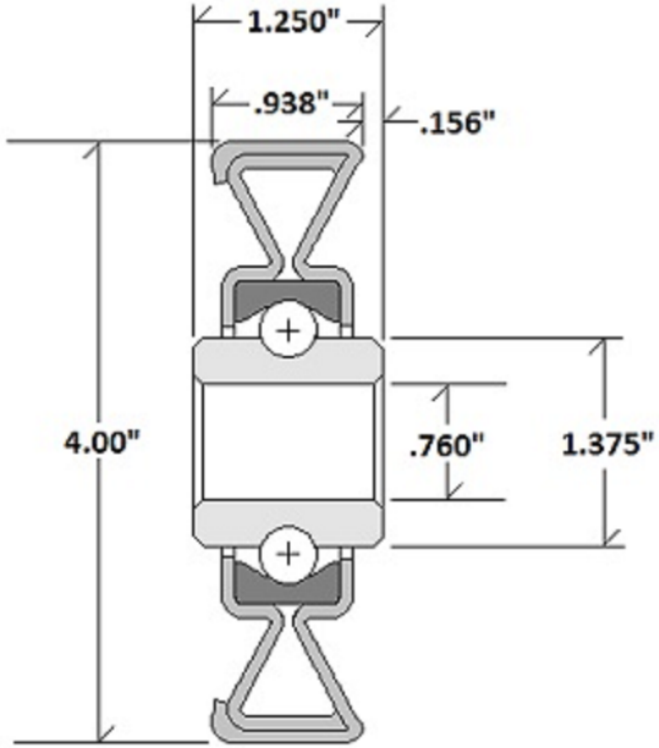

UNLESS OTHERWISE SPECIFIED: DIMENSIONS ARE IN MILLIMETERS SURFACE FINISH: TOLERANCES: LINEAR: ANGULAR:	FINISH: Zinc Plated				DEBURR AND BREAK SHARP EDGES	DO NOT SCALE DRAWING / REVISION
	NAME	SIGNATURE	DATE			TITLE: Skate Wheel
DRAWN						
CHK'D						
APPV'D						
MFG						
Q.A				MATERIAL: Steel		DWG NO. DRAWING / A4
				WEIGHT: 1.8 lbs		SCALE:1:1 / SHEET 1 OF 1

SOLIDWORKS Educational Product. For Instructional Use Only.